Design Optimisation

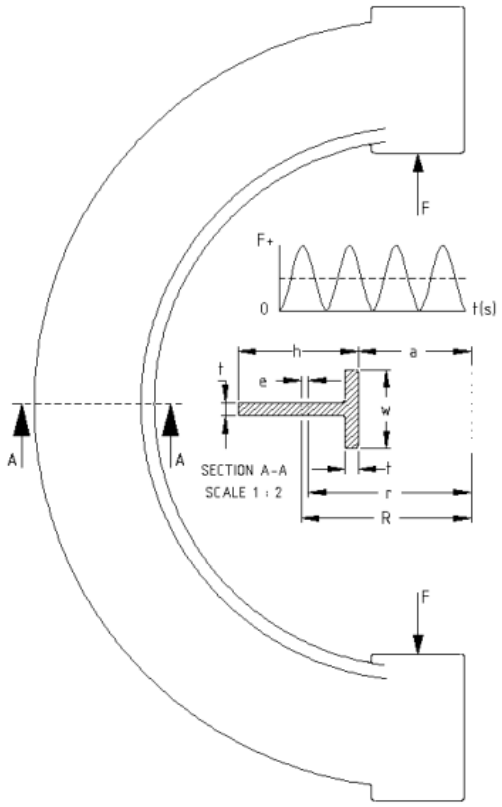

Objective:

This short paper is intended to explain what optimisation is and how it can be used in the design process.

Contents

What is Optimisation? 1

Optimisation Techniques 2

1. Differential Calculus 2
2. Linear Programming 3
3. Dynamic Programming 3
4. Nonlinear Optimisation 4
5. Johnson's Method of Optimum Design 4
6. Taguchi Methods 5
7. Probabilistic Optimisation 5
8. Optimisation using Value Curves 6

LoSiento

UK: +44-151-329-0643
Ireland: +353-74-971-0878
contact@losiento.biz
www.losiento.biz

What is Optimisation?

Optimisation is simply looking for the minimum or maximum of something from a range of alternatives.

We all perform optimisation instinctively on a daily basis:

What is the shortest way to drive to my destination?

MINIMISE COST & TIME

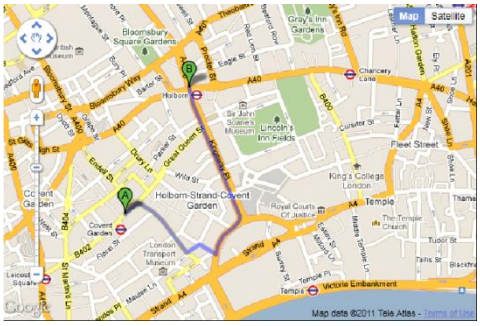

What is the best way to arrange the furniture in my home?

MAXIMISE CONVENIENCE & ATTRACTIVENESS



What is the quickest way to mow the lawn?

MINIMISE TIME



Which broadband plan offers the best value?

MINIMISE COST & MAXIMISE PERFORMANCE



We typically solve these types of problems by trial-and-error as the real world consequences of getting it wrong are normally relatively low.

But how do we solve more complicated problems when trial-and-error is not good enough?

Optimisation Techniques

For important problems mathematical techniques are used to arrive at a solution. The decision over which optimisation approach to pick depends upon the type of problem we face.

Unfortunately there is no universal algorithm that can solve every problem so I draw on a variety of well-established techniques:

1. Differential Calculus
2. Linear Programming
3. Dynamic Programming
4. Nonlinear Optimisation
5. Johnson's Method of Optimum Design
6. Taguchi Methods
7. Probabilistic Optimisation
8. Optimisation using Value Curves

The safest approach is to assume that any untested answer is wrong so I will always try to use multiple approaches in order to check the final result.

In order for you to get an idea of the type of problems that can be solved I have provided one fully worked example for each approach.

1. Differential Calculus

Differential calculus is the first port of call for relatively simple optimisation problems.

Example: ***Rectangular tank***
A rectangular tank that can hold 500 litres is required. The fabricator we intend to use has quoted for the base costing £20/$m^3$3 whilst the sides are priced at £15/m^3 What are the most economical dimensions?

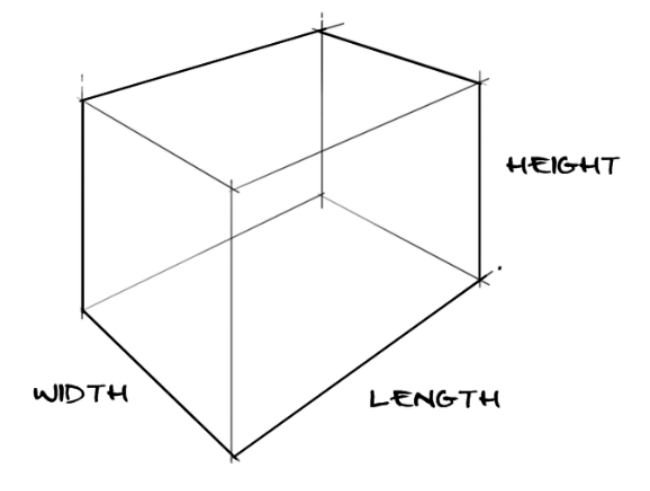

For the solution see **Appendix A**

2. Linear Programming

Linear programming was invented by the U.S. Air Force during WW2. Its use is not particularly common within mechanical engineering but there are occasions when it is a very useful tool to have.

Example: *Production Planning*

The production of two components requires a specific sequence of manufacturing operations. The estimated set up and machining time for each part on the various machines has been recorded by the client as:

	Lathe	Shaper	Drilling Machine	Milling Machine	Grinding Machine
Part A	0.6	0.4	0.1	0.5	0.2
Part B	0.9	0.1	0.2	0.3	0.3

The client has the follow machines:

	Lathe	Shaper	Drilling Machine	Milling Machine	Grinding Machine
QTY	10	3	4	6	5

Availability 8 Hours a day for 30 days a month

The problem is to find the production plan that maximises the total monthly output. For the solution see **Appendix B**

3. Dynamic Programming

Dynamic Programming was developed by Richard Bellman in the 1950's. Bellman's approach works on the basis that some problems lend themselves to being solved sequentially.

Example: *Pipeline*

A pipeline is to be created that runs from city A to city K via the network illustrated below. The cost (in thousands of pounds) associated with each length of pipeline is indicated on the network. The problem is to try and establish the minimum cost route from A-K.

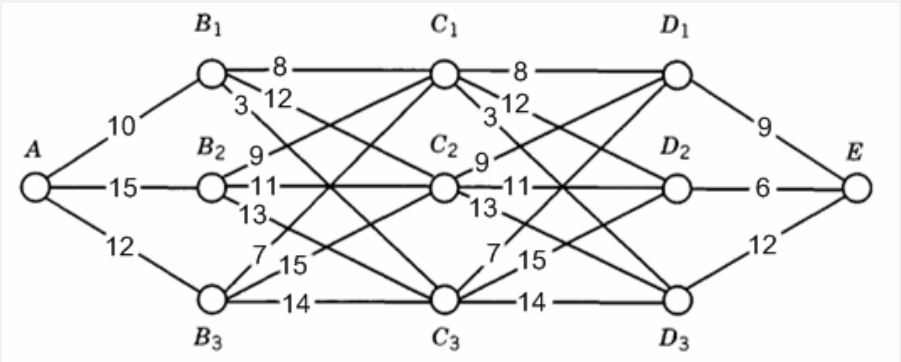

For the solution see **Appendix C**

4. Nonlinear Optimisation

Unlike linear problems the method of finding the optimum solution can be much more difficult when we have nonlinear relationships. For this class of problems I use a range of well tested FORTRAN routines which fall under two main groupings; gradient methods with penalty functions and random search strategies.

Example: ***Steel Rolling***

The problem is to design a bespoke pair of rolls used in the cold rolling of steel. The goal we have is to minimise the rolling load that is required.

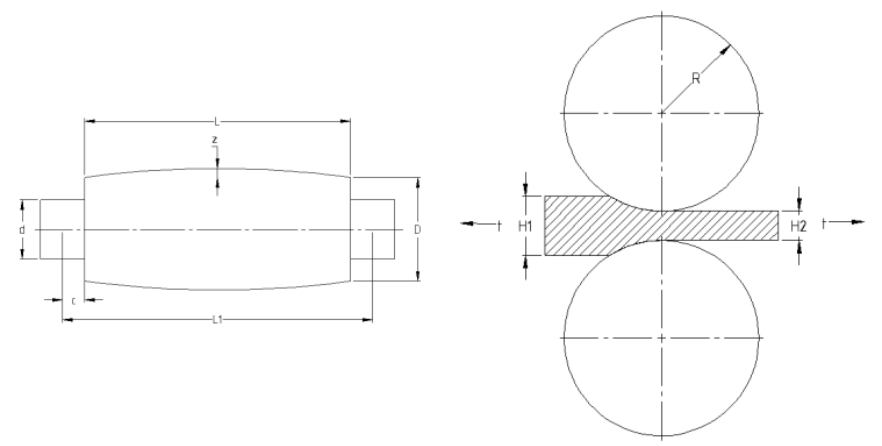

For the solution see **Appendix D**

5. Johnson's Method of Optimum Design

The late R. C. Johnson proposed in many writings on the topic an ingenious optimisation technique. Equations are developed for the problem and then manipulated in such a way as to allow the optimal result to be determined.

Example: ***Drum Brake***

The problem is to minimise the total weight of a sand cast alloy steel C-frame subject to cyclic loading.

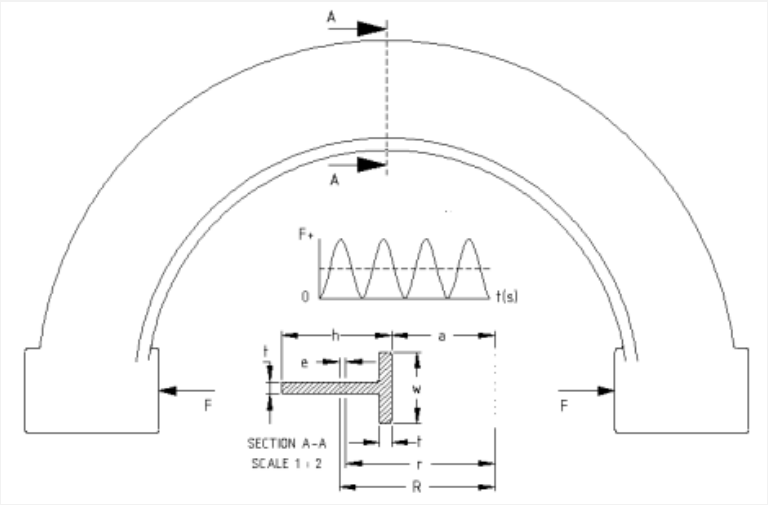

For the solution see **Appendix E**

6. Taguchi Methods

Taguchi methods revolve around matrix experiments and are a very powerful approach for optimisation problems when we are unable to develop mathematical relations.

Example: ***Rock Crusher***

The goal is to maximise the force delivered by a revolving wheel which is to be used to crush rocks.

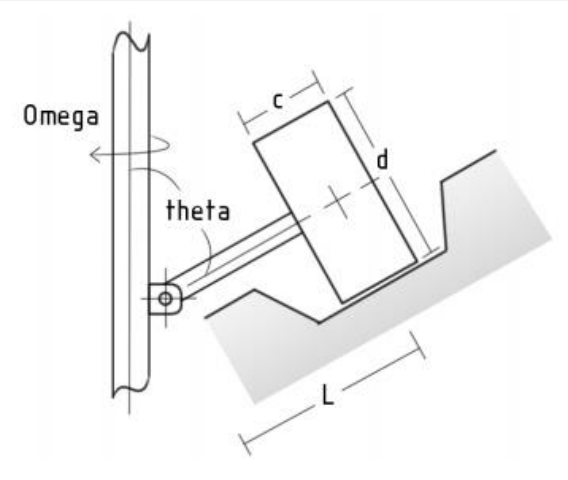

For the solution see **Appendix F**

7. Probabilistic Optimisation

Probabilistic Optimisation is a class of problems that deal with a statistical element. In these situations I typically will write a custom stochastic search routine that will use Monte Carlo methods.

Example: ***Sandwich Panel***

The goal is to minimise the total weight of a floor panel that is to be used in an aircraft. The panel is to be formed of two aluminum skins with a foamed polyurethane core. It must support 8,000 pounds (3623kg) with a reliability of 0.995.

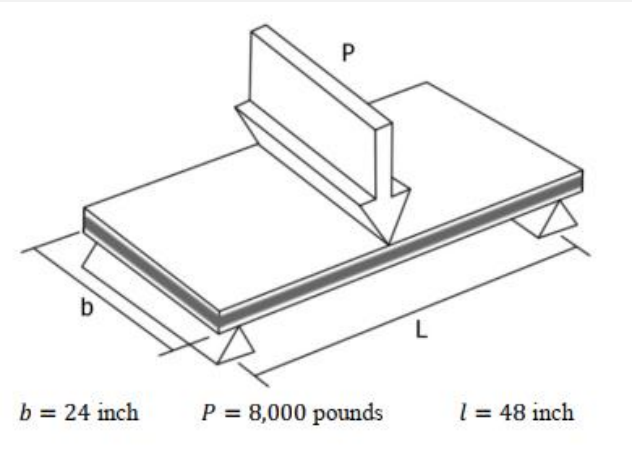

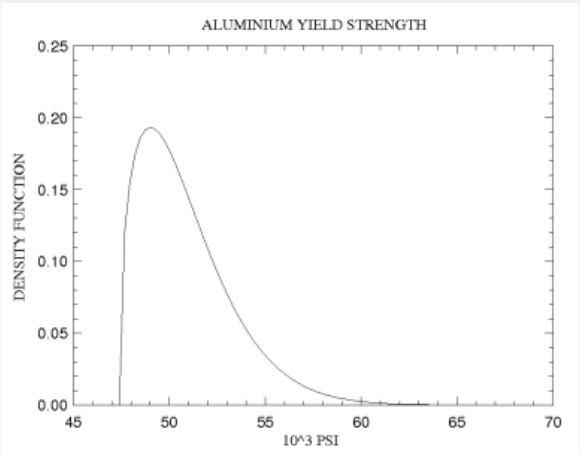

For the solution see **Appendix G**

8. Optimisation using Value Curves

Subjectively drawn Value Curves are a very powerful tool at the start of a design project when we have lots of different conflicting requirements to consider.

Example: ***Aircraft Design***

The goal is to analyse just how good a new prototype aircraft is with respect to nine key specifications.

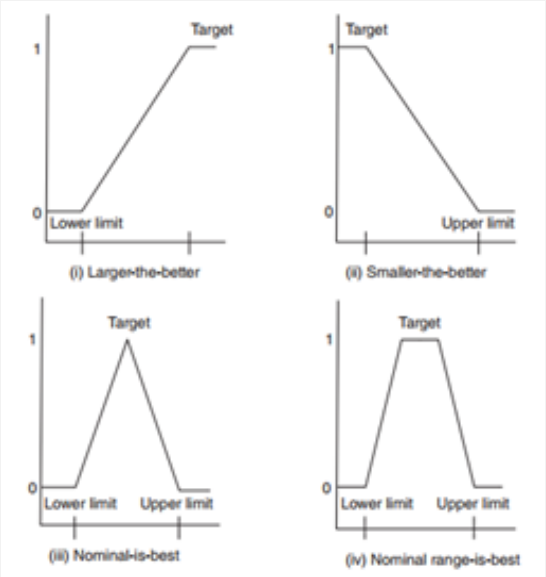

Item	Detail Requirements	Units	Importance	Value Curve	Lower Limit	Target	Upper Limit	Actual
1	Mission radius	nm	5.0	Nominal is best	296.0	365.5	435.0	405
2	Ultimate load factor	UL	4.5	Nominal is best	6.5	7.2	7.9	6.7
3	Combat Mach number	UL	4.0	Nominal is best	0.9	1.0	1.1	0.99
4	Mission payload	Lb	3.0	Smaller is better	-	500	1,000	700
5	Thrust per engine	Lb	5.0	Nominal is best	14,500	17,750	21,000	17,750
6	Ref. Wing area	ft^2	5.0	Nominal is best	380	450	520	430
7	Stealth penalty	Lb	4.5	Smaller is better	-	700	1,000	500
8	Auxiliary fuel tanks	# of	3.0	Nominal is best	0	1	2	1
9	Specific fuel consumption	k-factor	3.0	Nominal is best	0.90	0.95	1.00	0.93

For the solution see **Appendix H**

I hope that I have been able to demonstrate to you two things...

The first is that optimisation can be used at all stages of the design process.

The second is that these techniques can tackle difficult problems when the consequences of getting the answer wrong will be severe.

If you have an engineering problem that you would like to discuss then get in touch today:

UK +44 151 329 0643
ROI +353 74 971 0878
contact@losiento.biz

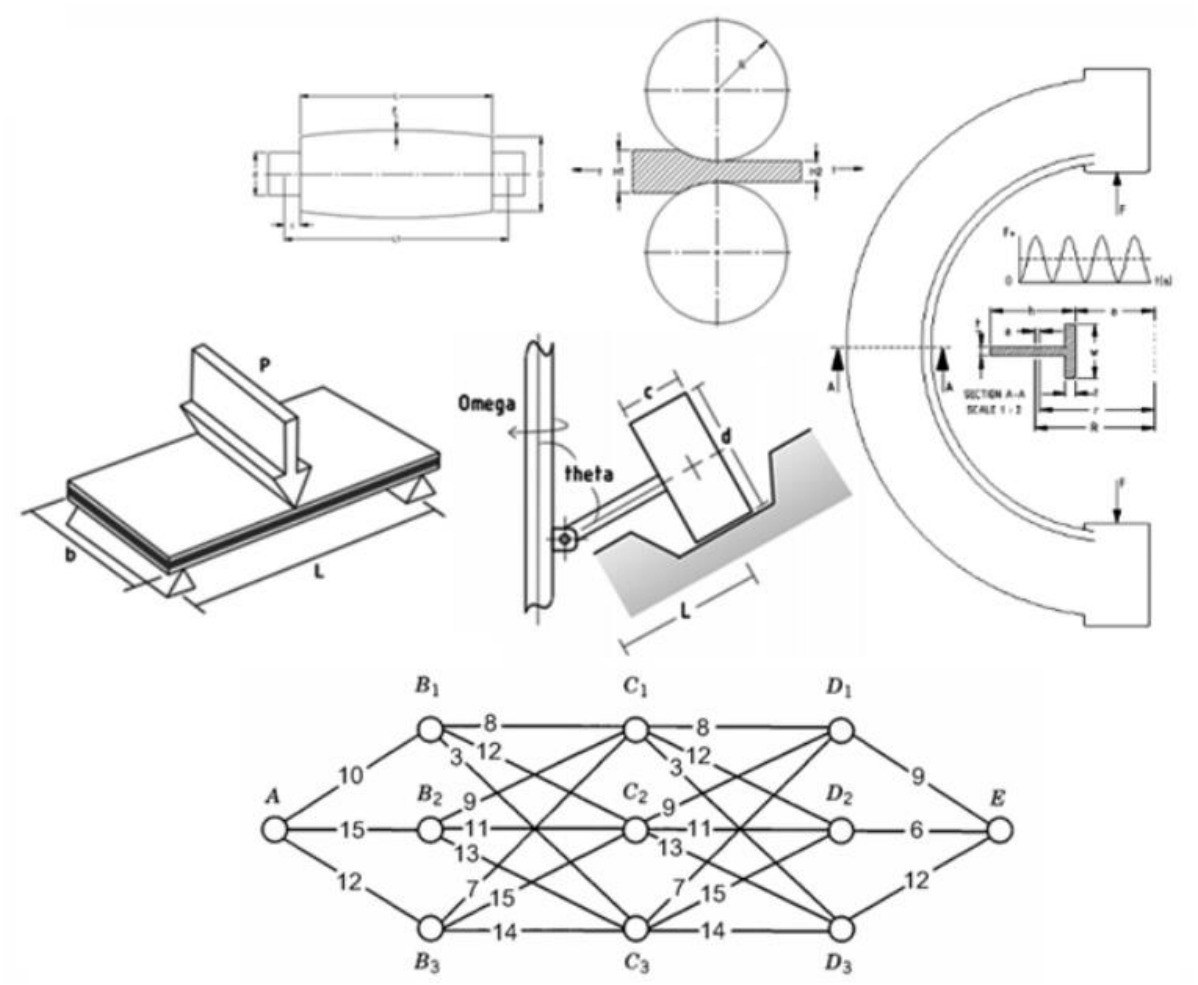

Please note that the solutions to the optimisation examples are contained in the appendices that follow overleaf…

Appendix A

Differential Calculus:
Description: Rectangular Tank
Units: Metric
Issue: A

Summary:

The recommended dimensions for the tank are to be taken as:

- Width = 0.909 m
- Length = 0.909 m
- Height = 0.606 m

Background to Problem:

The most economical dimensions for a rectangular tank that can hold 500 litres are required.

The fabricator we intend to use has quoted a price for the base as £20/m^3 and the sides as £15/m^3.

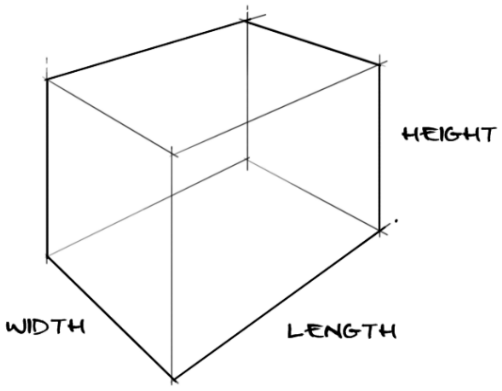

Optimisation Approach:

The volume of the tank is given by:

$v = w \times l \times h = 500\ litres$ [1]

Rearranging gives:

$h = \frac{500}{wl}$ [2]

The cost of the tank is a result of the four sides at £*15/m*^{3} and a single base at £*20/m*^{3} hence our cost function is:

$c = \left(2\left(15(hw)\right) + 2\left(15(hl)\right)\right) + 20(lw)$ [3]

$c = 30hw + 30hl + 20lw$ [4]

$c = 30\left(\frac{500}{wl}\right)w + 30\left(\frac{500}{wl}\right)l + 20lw$ [5]

$c = \left(\frac{15{,}000}{l}\right) + \left(\frac{15{,}000}{w}\right) + 20lw$ [6]

Taking the partial derivatives of the developed cost function and equating the result to zero:

$\frac{\partial c}{\partial l} = 20w - \frac{15{,}000}{l^2} = 0$ [7]

$\frac{\partial c}{\partial w} = -\frac{15{,}000}{w^2} + 20l = 0$ [8]

From which the optimum dimensions can be determined as:

$w = 0.90856\ m$ [9]

$l = 0.90856\ m$ [10]

$h = 0.6057\ m$ [11]

The price of the tank is £49.52.

END OF DOCUMENT

Appendix B

Linear Programming:
Description: Production Planning
Units: Metric
Issue: A

Summary:

Based on the information supplied this report recommends the monthly production quantities as follows:

- Part A = 1,360
- Part B = 1,760
- Total = 3,120

Background to Problem:

The production of two components requires a sequence of specific manufacturing operations. The estimated machining time for each part on the various machines that are required has been recorded by the client as:

	Lathe	Shaper	Drilling Machine	Milling Machine	Grinding Machine
Part A	0.6	0.4	0.1	0.5	0.2
Part B	0.9	0.1	0.2	0.3	0.3

The number of different machines available to the client and their availability for operation is as follows:

	Lathe	Shaper	Drilling Machine	Milling Machine	Grinding Machine
QTY	10	3	4	6	5
Availability	8 Hours a day for 30 days a month				

We are tasked with finding the production plan for maximising the total output per month

Optimisation Approach:

Linear programming via the Simplex Method is to be used.

On this basis:

$$\uparrow U = A + B \text{ [1]}$$

Subject to:

$$0.6A + 0.9B \leq 2{,}400 \text{ [2]}$$

$$0.4A + 0.1B \leq 720 \text{ [3]}$$

$$0.1A + 0.2B \leq 960 \text{ [4]}$$

$$0.5A + 0.3B \leq 1{,}440 \text{ [5]}$$

$$0.2A + 0.3B \leq 1{,}200 \text{ [6]}$$

$$A \geq 0, B \geq 0 \text{ [7]}$$

Adding slack variables and rearranging gives:

$$-A - B + U = 0 \text{ [8]}$$

$$0.6A + 0.9B + S_1 = 2{,}400 \text{ [9]}$$

$$0.4A + 0.1B + S_2 = 720 \text{ [10]}$$

$$0.1A + 0.2B + S_3 = 960 \text{ [11]}$$

$$0.5A + 0.3B + S_4 = 1{,}440 \text{ [12]}$$

$$0.2A + 0.3B + S_5 = 1{,}200 \text{ [13]}$$

The tableaus of the Simplex method are shown below:

A	B	S_1	S_2	S_3	S_4	S_5	U	
0.6	0.9	1	0	0	0	0	0	2400
0.4	0.1	0	1	0	0	0	0	720
0.1	0.2	0	0	1	0	0	0	960
0.5	0.3	0	0	0	1	0	0	1440
0.2	0.3	0	0	0	0	1	0	1200
-1	-1	0	0	0	0	0	1	

A	B	S_1	S_2	S_3	S_4	S_5	U	
0.6667	1	1.1111	0	0	0	0	0	2666.667
0.3333	0	-0.1111	1	0	0	0	0	453.333
-0.0333	0	-0.2222	0	1	0	0	0	426.667
0.3000	0	-0.3333	0	0	1	0	0	640.000
0	0	-0.3333	0	0	0	1	0	400.000
-0.3333	0	1.1111	0	0	0	0	1	2666.667

A	B	S_1	S_2	S_3	S_4	S_5	U	
0	1	1.3333	-2	0	0	0	0	1760
1	0	-0.3333	3	0	0	0	0	1360
0	0	-0.2333	0.1	1	0	0	0	472
0	0	-0.2333	-0.9	0	1	0	0	232
0	0	-0.3333	0	0	0	1	0	400
0	0	1	1	0	0	0	1	3120

Hence to maximise production:

$$A = 1{,}360 \text{ [14]}$$

$$B = 1{,}760 \text{ [15]}$$

In order to check the validity of [14] and [15] a FORTRAN subroutine was created using the formulae listed from [1] through [7].
The associated matrices, code and results of the Revised Simplex Program are listed below:

$$C = \begin{bmatrix} 1 \\ 1 \\ 0 \\ 0 \\ 0 \\ 0 \\ 0 \end{bmatrix} \quad [16]$$

$$B = \begin{bmatrix} 2400 \\ 720 \\ 960 \\ 1440 \\ 1200 \end{bmatrix} \quad [17]$$

$$A = \begin{bmatrix} 0.6 & 0.9 & 1 & 0 & 0 & 0 & 0 \\ 0.4 & 0.1 & 0 & 1 & 0 & 0 & 0 \\ 0.1 & 0.2 & 0 & 0 & 1 & 0 & 0 \\ 0.5 & 0.3 & 0 & 0 & 0 & 1 & 0 \\ 0.2 & 0.3 & 0 & 0 & 0 & 0 & 1 \end{bmatrix} \quad [18]$$

```
PROGRAM MAIN
DIMENSION A(5,7),B(5),C(7),X(5),W(50)
N=7
M=5
DATA (A(1,J),J=1,7)/0.6,0.9,1.0,0.0,0.0,0.0,0.0/
DATA (A(2,J),J=1,7)/0.4,0.1,0.0,1.0,0.0,0.0,0.0/
DATA (A(3,J),J=1,7)/0.1,0.2,0.0,0.0,1.0,0.0,0.0/
DATA (A(4,J),J=1,7)/0.5,0.3,0.0,0.0,0.0,1.0,0.0/
DATA (A(5,J),J=1,7)/0.2,0.3,0.0,0.0,0.0,0.0,1.0/
DATA B/2400.,720.,960.,1440.,1200./
DATA C/-1.,-1.,0.,0.,0.,0.,0./
CALL SIMPLE(N,M,A,B,C,X,U,W)
STOP
END
```

```
OPTIMUM SOLUTION FOUND BY SIMPLE:

MINIMUM U = -0.31200000E+04

     X( 1) =  0.13600000E+04

     X( 2) =  0.17600000E+04

     X( 3) =  0.00000000E+00

     X( 4) =  0.00000000E+00

     X( 5) =  0.47200000E+03

     X( 6) =  0.23200000E+03

     X( 7) = -0.31200000E+04
```

It can be seen that these results confirm the values previously derived by hand.

END OF DOCUMENT

Appendix C

Dynamic Programming:
Description: Pipeline
Units: Metric
Issue: A

Summary:

The optimum route through the network is given by: $A \rightarrow B_1 \rightarrow C_3 \rightarrow D_1 \rightarrow E$

Background to Problem:

A pipeline is to be created that runs from city **A** to city **K** via the network illustrated below. Due to pumping requirements the pipeline must pass through one node out of B_1, B_2 and B_3, one out of C_1, C_2 and C_3 and one out of D_1, D_2 and D_3.

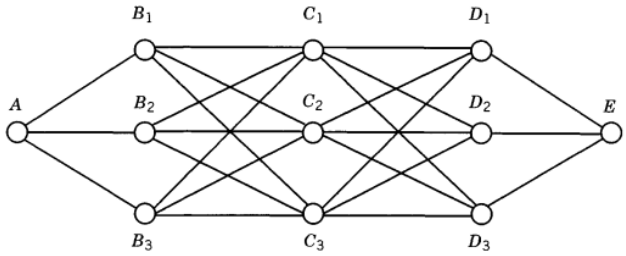

The cost in thousands of pounds associated with each length of pipeline is indicated on the network. The problem we face is to try and establish the minimum cost route from A-K.

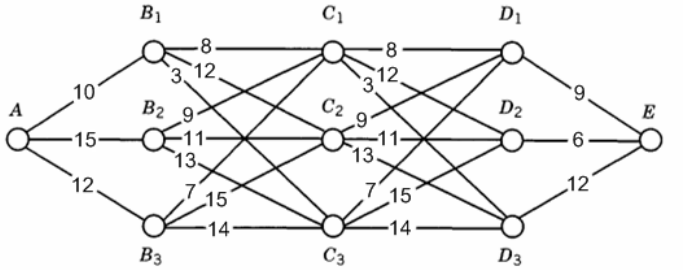

Optimisation Approach:

From a first appraisal we can see that whatever route we take we have to pass through a minimum of three nodes. On this basis we use four stages to represent the dynamic problem with the goal being to establish the minimum cost route.

We start by compiling a table for the last of the four dynamic stages.

With 1 stage remaining			
Initial State	Decision E	**Optimum Decision**	**Min Cost**
D_1	9	E	9
D_2	6	E	6
D_3	12	E	12

For the third stage:

With 2 stages remaining					
Initial State	Decision			**Optimum Decision**	**Min Cost**
	D_1	D_2	D_3		
C_1	8 + 9	12 + 6	3 + 12	D_3	15
C_2	9 + 9	11 + 6	13 + 12	D_2	17
C_3	7 + 9	15 + 6	14 + 12	D_1	16

For the second stage:

With 3 stages remaining					
Initial State	Decision			**Optimum Decision**	**Min Cost**
	C_1	C_2	C_3		
B_1	8 + 15	12 + 17	3 + 16	C_3	19
B_2	9 + 15	11 + 17	13 + 16	C_1	24
B_3	7 + 15	15 + 17	14 + 16	C_1	22

Finally we then arrive at the start where we only have one input which is the initial state:

With 4 stages remaining					
Initial State	Decision			**Optimum Decision**	**Min Cost**
	B_1	B_2	B_3		
A	10 + 19	15 + 24	12 + 22	B_1	29

We can now determine the optimum route through the network by working forwards from A such that:

$A \rightarrow B_1 \rightarrow C_3 \rightarrow D_1 \rightarrow E$

The minimum total cost for the pipeline is thus:

$£29 \times 10^3$

END OF DOCUMENT

Appendix D

Non-Linear Optimisation
Description: Cold Rolling Load
Units: Imperial
Issue: A

Summary:

This report documents the preparation of an optimisation program for the design of rolls to be used for the cold rolling of metal.

General Background:

A computer program is required that allows a user to enter a fixed range of data with respect to the sheet rolling process in order to generate design values for the roll radius, strip tension and camber.

The values derived are to be used by the customer in the manufacturing of bespoke rolls.

The goal for each pair of bespoke rolls is to minimise the rolling load required.

Theoretical Background:

Nomenclature:

	Description	Value	Units
c	*Figure 1*	TBD	inch
d	Neck diameter - *Figure 1*	TBD	inch
D	Diameter of roll - *Figure 1*	TBD	inch
E	Modulus of elasticity	$30E6$	psi
f_1	Bending deflection at roll centre	TBD	inch
f_2	Shear deflection at the roll centre	TBD	inch
f_1'	Bending deflection at edge of strip	TBD	inch
f_2'	Shear deflection at edge of strip	TBD	inch
G	Shear modulus	$11.5E6$	psi
h_1	Initial strip thickness - *Figure 2*	0.040	inch
h_2	Final strip thickness - *Figure 2*	0.034	inch
Δh	Change of strip thickness	TBD	inch
w	Width of strip	30	inch
L_1	*Figure 1*	50	inch
L	*Figure 1*	40	inch
P	Rolling load	TBD	pounds
P_1	First approximation of rolling load	TBD	pounds
Q	Allowable variation of edge to centre thickness	0.05	%
R	Radius of roll	TBD	inch
R'	Effective radius of flattened roll	TBD	inch
S	Average plane strain yield stress	TBD	psi
t	Tension in strip	TBD	psi
Y	Yield stress of strip	35,900	psi
z	Camber	TBD	psi
μ	Coefficient of friction for cold rolling of steel	0.07	ul
σ_b	Predicted bending stress in the roll barrel	TBD	psi
σ_n	Predicted bending stress in the roll neck	TBD	psi
σ_{m}	Allowable stress in the steel rolls	20,000	psi

Agreed user controlled values:
$h_1, h_2, L_1, L, w, Y, \sigma_{max}, \mu, Q$

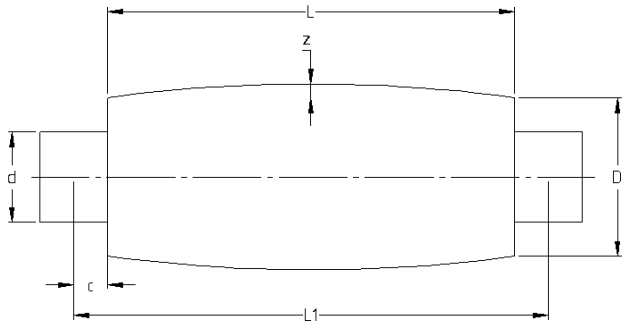

Figure 1: *Roll geometry with exaggerated camber*

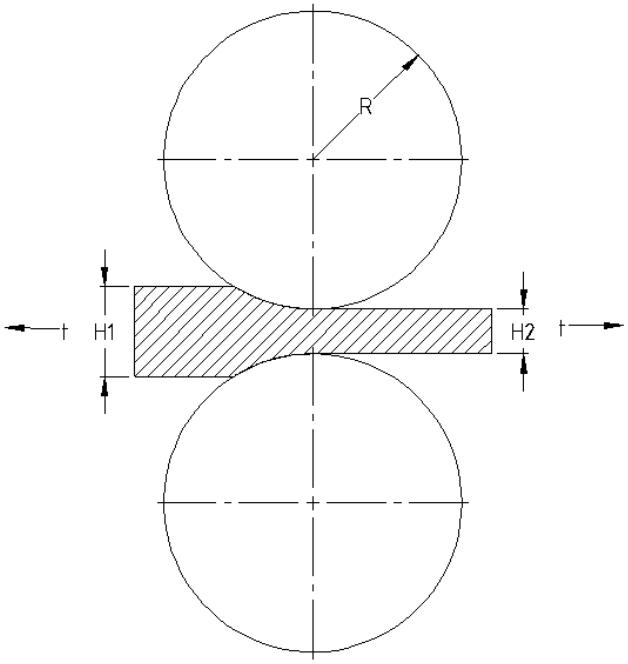

Figure 2: *Sheet thickness and tension reference*

The change of strip thickness is given by:

$$\Delta h = h_1 - h_2 \quad [1]$$

The maximum possible reduction in thickness that can be achieved is:

$$\Delta h_{max} = \mu R \quad [2]$$

For a given material and set of rolls the minimum thickness is taken to be:

$$h_{min} = \frac{\mu R S}{3.72 \times 10^6} \quad [3]$$

Roll variable c is simply:

$$c = \frac{L_1 - L}{2} \quad [4]$$

Whilst the roll neck diameter is:

$d = 0.75 \times D$ [5]

The rolling load to be minimised is:

$$P = wS\sqrt{R'\Delta h}\left(1 + \frac{1.6\mu\sqrt{R'\Delta h} - 1.2\Delta h}{h_1 + h_2}\right)\left(1 - \frac{\sigma_t}{S}\right)$$ [6]

Where:

$$R' = R\left(1 + \frac{1.67 \times 10^{-7} \times P_1}{\Delta h w}\right)$$ [7]

$P_1 = 1.2wS\sqrt{R\Delta h}$ [8]

$$\sigma_t = \frac{1}{2}\left(\frac{t}{wh_1} + \frac{t}{wh_2}\right)$$ [9]

$S = 1.155 \times Y$ [10]

Deflection of the rolls under the rolling force will result in an uneven thickness across the width of the strip. This can be compensated for by adding camber to the rolls as a form of compensation.

The relevant roll deflections are given by:

$$f_1 = \frac{P}{18.8ED^4}\left(8{L_1}^3 - 4L_1w^2 + w^3 + 64c^3\right)\left(\left(\frac{D}{d}\right)^4 - 1\right)$$ [11]

$$f_2 = \frac{P}{G\pi D^2}\left(L_1 - \frac{w}{2} + 2c\left(\left(\frac{D}{d}\right)^2 - 1\right)\right)$$ [12]

$$f_1' = \frac{P}{2.36ED^4}\left({L_1}^3 - 2L_1w^2 + w^3 + 8c^3\right)\left(\left(\frac{D}{d}\right)^4 - 1\right)$$ [13]

$$f_2' = \frac{P}{G\pi D^2}\left(L_1 - w + 2c\left(\left(\frac{D}{d}\right)^2 - 1\right)\right)$$ [14]

The total deflection at the roll centre is thus:

$\delta_c = f_1 + f_2$ [15]

Whilst the total deflection at the edge of the roll is:

$\delta_e = f_1' + f_2'$ [16]

Adding the effect of camber at the centre of the roll gives:

$\delta_1 = \delta_c - z$ [17]

Where it is taken that the camber must conform to:

$z \leq 0.001D$ [18]

The allowable variation of edge to centre thickness is specified as 5% of h_2:

$Q = h_2 \times 0.05$ [19]

The resultant deflection variation between the centre and edge must be less than that specified by Q:

$[\delta_2 = \delta_e - \delta_1] \leq Q$ [20]

Failure of the rolls is taken to be via bending fatigue and the predicted bending stresses for the roll neck and roll barrel respectively is:

$$\sigma_n = \frac{Pc}{0.2d^3}$$ [21]

$$\sigma_b = 1.2\frac{P}{R^3}\left(\frac{L_1}{4} - \frac{w}{8}\right)$$ [22]

Both of the aforementioned stresses must be less than the maximum allowable stress specified for the material such that:

$\sigma_n \leq \sigma_{max}$ [23]

$\sigma_b \leq \sigma_{max}$ [24]

Reference:

1. Optimal Engineering Design - *Siddall*
2. The principles of metalworking - *Rowe*
3. Metal deformation processes - *Shey*
4. Fundamentals of rolling - *Wusatowski*

Objective Function:

The objective function to be minimised is given by **[6]**:

$$U_{\downarrow} = wS\sqrt{R'\Delta h}\left(1 + \frac{1.6\mu\sqrt{R'\Delta h} - 1.2\Delta h}{h_1 + h_2}\right)\left(1 - \frac{\sigma_t}{S}\right)$$ [25]

The following design variables are to be considered:

	Description	Min	Max	
x_1	Radius of roll (R)	1	34	[26]
x_2	Tension in strip (t)	2,000	17,950	[27]
x_3	Camber (z)	0	[18]	[28]

Inequality Constraints:

Eleven inequality constraints have been identified:

$\emptyset_1 = x_1 \leq 34$ [29]

$\emptyset_2 = x_1 \geq 10$ [30]

$\emptyset_3 = x_2 \leq 17{,}950$ [31]

$\emptyset_4 = x_2 \geq 2{,}000$ [32]

$\emptyset_5 = x_3 \leq 0.001D$ [33]

$\emptyset_6 = x_3 \geq 0$ [34]

$\emptyset_7 = \Delta h \leq \Delta h_{max}$ [35]

$\emptyset_8 = h_2 \geq \Delta h_{min}$ [36]

$\emptyset_9 = \sigma_n \leq 20{,}000$ [37]

$\emptyset_{10} = \sigma_b \leq 20{,}000$ [38]

$\emptyset_{11} = \delta_2 \leq Q$ [39]

Equality Constraints:

No equality constraints are to be used within this study.

Results:

Based on the sample data the results of the four best performing FORTRAN subroutines are tabulated below.

	ADRANS	SEEK	SIMPLX	PDS
x_1	0.626723 E+01	0.651572 E+01	0.631093 E+01	0.626706 E+01
x_2	0.179498 E+05	0.179488 E+05	0.179428 E+05	0.179498 E+05
x_3	0.999119 E-02	0.862496 E-02	0.983756 E-02	0.999699 E-02
U	0.203523 E+06	0.209169 E+06	0.204568 E+06	0.203519 E+06

	Description	Min	Units	
x_1	Radius of roll (R)	6.26	inch	[40]
x_2	Tension in strip (t)	17,949	inch	[41]
x_3	Camber (z)	0.0099	inch	[42]
U	Rolling Load	20,351	pounds	[43]

It should be noted that whilst Powell's Direct Search Method (*See Appendix*) gave the lowest value of the objective function it requires an educated guess as to the starting point required in initiating the search.

The most flexible routine was found to be ADRANS as during its use it did not require any form of tuning to converge upon a viable solution.

Program Development:

A second optimisation routine was written that used ADRANS as the primary search tool to bring the search towards an appropriate region where the PDS subroutine could then be called to locate a final optimum.

For the sake of simplicity the FORTRAN program was wrapped within a simple GUI, a screenshot of which is shown in *Figure 4*.

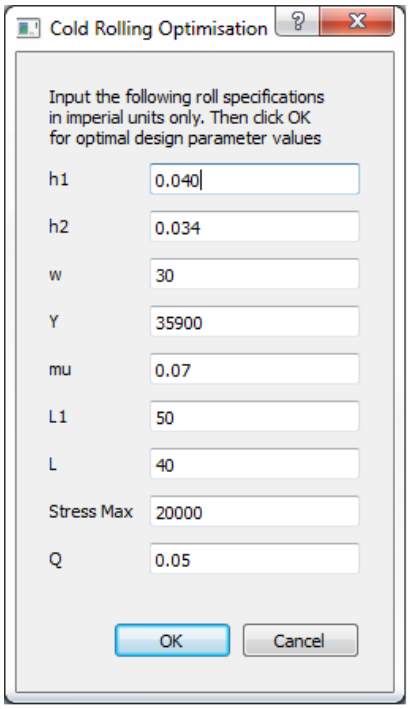

Figure 3: *Graphical User Interface Input*

The logic behind the main program is illustrated below in *Figure 4*.

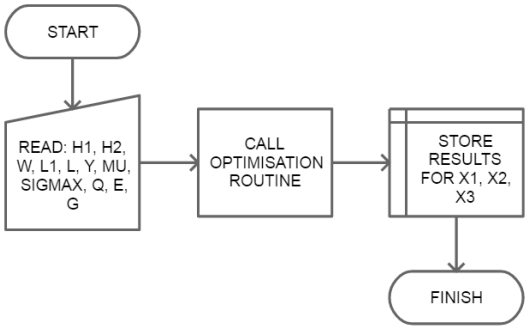

Figure 4: *Program flowchart*

#5 - Conclusions

A successful FORTRAN based search strategy has been implemented and incorporated into a simple graphical user interface. This allows a user to easily input a fixed range of data in order to quickly generate the optimal values for the associated manufacturing design parameters.

Appendix

```
      PROGRAM MAIN
C     PDS SUBROUTINE
      DIMENSION X(3),XSTRT(3),RMAX(3),RMIN(3),PHI(11),PSI(1),W(69)
      COMMON/PDS/IDATA,IPRINT,STEPMX,GSTOP,MAXM,ICONV,TOL,ZERO,R,REDUCE
C
      N=3
      IPRINT=1
      IDATA=1
      NCONS=11
      NEQUS=0
      STEPMX=0.1
      GSTOP=1E-4
      ICONV=1
      NPENAL=2
      MAXM=500
C
C     OPTIMISATION VARIABLES
C     X1 = RADIUS OF ROLL (INCH)
C     X2 = TENSION IN STRIP (PSI)
C     X3 = CAMBER (INCH)
      DATA RMAX / 34., 17950., 0.025/
      DATA XSTRT/ 17., 10000., 0.005/
      DATA RMIN /  1.,  2000., 0.000/
C
      CALL PDS(N,NCONS,NEQUS,NPENAL,RMAX,RMIN,XSTRT,X,U,PHI,PSI,NVIOL
     1,W)
      CALL ANSWER(U,X,PHI,PSI,N,NCONS,NEQUS)
      STOP
      END


      SUBROUTINE UREAL(X,U)
      DIMENSION X(1)
      REAL H1,H2,W,L,L1,Y,MU,SIGMAX,Q,E,G,PI,R,T,Z,QQ,C,DIA,D,DIFFH
     1,DIFFHMAX,S,SIGMAT,P1,RSHARP,TEMP5,P
      COMMON/SWAP/H1,H2,W,L,L1,Y,MU,SIGMAX,Q,E,G,PI,R,T,Z,QQ,C,DIA,D
     1,DIFFH,DIFFHMAX,S,SIGMAT,P1,RSHARP,TEMP5,P
C
C     STARTING THICKNESS OF SHEET (INCH)
      H1=0.040
C     FINISHED THICKNESS OF SHEET (INCH)
      H2=0.034
C     WIDTH OF SHEET (INCH)
      W=30.
C     ROLL LENGTH (INCH)
      L=40.
C     ROLL LENGTH #1 (INCH)
      L1=50.
C     YIELD STRESS OF SHEET (PSI)
      Y=35900.
C     COEFFICIENT OF FRICTION FOR COLD ROLLING OF STEEL
      MU=0.07
C     MAXIMUM ALLOWABLE STRESS IN THE ROLL
      SIGMAX=20000.
C     ALLOWABLE VARIATION OF EDGE TO CENTRE THICKNESS
      Q=0.05
C     MODULUS OF ELASTICITY
      E=30.E6
C     SHEAR MODULUS
      G=11.5E6
C     ****************************************************************
C     STANDARD DATA
      PI=3.14159
C     ****************************************************************
C     OPTIMISATION VARIABLES:
C     RADIUS OF ROLL (INCH)
      R =ABS(X(1))
C     TENSION IN STRIP (PSI)
      T =ABS(X(2))
C     CAMBER (INCH)
      Z =ABS(X(3))
C     ****************************************************************
C     START OF CALCULATIONS:
C     Q CONVERSION
      QQ=H2*0.05
C     ROLL VARIABLE
      C=(L1-L)/2.
C     ROLL DIAMETER
      DIA=2*R
```

```
C       ROLL NECK DIAMETER
        D=0.75*DIA
C       CHANGE OF STRIP THICKNESS
        DIFFH=H1-H2
C       MAXIMUM POSSIBLE REDUCTION IN STRIP THICKNESS
        DIFFHMAX=MU*R
C       ROLLING LOAD TO BE MINIMISED IS DEVELOPED VIA:
        S=1.155*Y
        SIGMAT=0.5*((T/(W*H1))+(T/(W*H2)))
        P1=1.2*W*S*SQRT(R*DIFFH)
        RSHARP=R*(1+((1.67E-7*P1)/(DIFFH*W)))
C       OBJECTIVE FUNCTION TO BE MINIMISED
        TEMP5=(1.6*MU*SQRT(RSHARP*DIFFH)-1.2*DIFFH)/(H1+H2)
        U=W*S*SQRT(RSHARP*DIFFH)*(1+(TEMP5))*(1-SIGMAT/S)
C       REFERENCE
        P=U
        RETURN
        END


C       INEQUALITY CONSTRAINTS
        SUBROUTINE CONST(X,NCONS,PHI)
        DIMENSION X(1),PHI(1)
        REAL HMIN,TEMP1,TEMP2,TEMP3,TEMP4,F1,F2,F1SHARP,F2SHARP,DEFLC
       1,DEFLE,DEFL1,DEFL2,H1,H2,W,L,L1,Y,MU,SIGMAX,Q,E,G,PI,R,T,Z,QQ,C
       2,DIA,D,DIFFH,DIFFHMAX,S,SIGMAT,P1,RSHARP,TEMP5,P
        COMMON/SWAP/H1,H2,W,L,L1,Y,MU,SIGMAX,Q,E,G,PI,R,T,Z,QQ,C,DIA,D
       1,DIFFH,DIFFHMAX,S,SIGMAT,P1,RSHARP,TEMP5,P
C       FOR A GIVEN MATERIAL AND SET OF ROLLS THE MINIMUM THICKNESS IS:
        HMIN=(MU*R*S)/(3.72E6)
C       ROLL DEFLECTIONS
        TEMP1=(P/(18.8*E*DIA**4))
        TEMP2=(8*L1**3-4.*L1*W**2+W**3+64.*C**3)
        TEMP3=(DIA/D)**4-1.
        F1=(TEMP1)*(TEMP2)*(TEMP3)
C
        F2=(P/(G*PI*DIA**2))*(L1-W/2.+2.*C*((DIA/D)**2-1.))
C
        TEMP4=(L1**3-2.*L1*W**2+W**3+8.*C**3)
        F1SHARP=(P/(2.36*E*DIA**4))*(TEMP4)*((DIA/D)**4-1.)
C
        F2SHARP=(P/(G*PI*DIA**2))*(L1-W+2*C*((DIA/D)**2-1.))
C       DEFLECTION AT THE ROLL CENTRE
        DEFLC=F1+F2
C       DEFLECTION AT THE EDGE OF THE ROLL
        DEFLE=F1SHARP+F2SHARP
C       INCORPORATING THE CAMBER
        DEFL1=DEFLC-Z
C       TOTAL DEFLECTION MUST BE LESS THAN QQ
        DEFL2=ABS(DEFLE-DEFL1)
C       FAILURE OF THE ROLLS VIA BENDING FATIGUE IN THE NECK:
        SIGMAN=(P*C)/(0.2*D**3)
C       FAILURE OF THE ROLLS VIA BENDING FATIGUE IN THE BARREL:
        SIGMAB=1.2*(P/R**3)*((L1/4.)-(W/8.))
C       INEQUALITY CONSTRAINTS:
        PHI(1)=34.-X(1)
        PHI(2)=X(1)-0.
        PHI(3)=17950.-X(2)
        PHI(4)=X(2)-2000.
        PHI(5)=0.010-X(3)
        PHI(6)=X(3)-0.
        PHI(7)=DIFFHMAX-DIFFH
        PHI(8)=H2-HMIN
        PHI(9)=SIGMAX-SIGMAN
        PHI(10)=SIGMAX-SIGMAB
        PHI(11)=QQ-DEFL2
        RETURN
        END
```

END OF DOCUMENT

Appendix E

Johnsons Method of Optimum Design
Description: C Frame
Units: Metric
Issue: A

Summary:

This report covers the optimum design of a C-frame that is to be subjected to fatigue loading. Suitable manufacturing dimensions have been derived via the use of Johnsons Method of Optimum Design.

Background to the problem:

At the time of writing it is predicted that the C-Frame clamp is to be sand cast from an alloy steel with the following material properties:

	Value	Units
Tensile Strength	1,240	MPa
Yield Strength	1,050	MPa
Endurance Limit	620	MPa

The use of a T-profile with a 100mm throat is fixed along with a 5mm constraint on the thickness. We are free to change the width and the height of the T-profile in order to minimise the mass of the clamp.

The clamp is to be subjected to 1 million cycles of a repeated 15,400 N loading. The load is estimated with a tolerance of +/- 20% and a reliability of 0.999 is required.

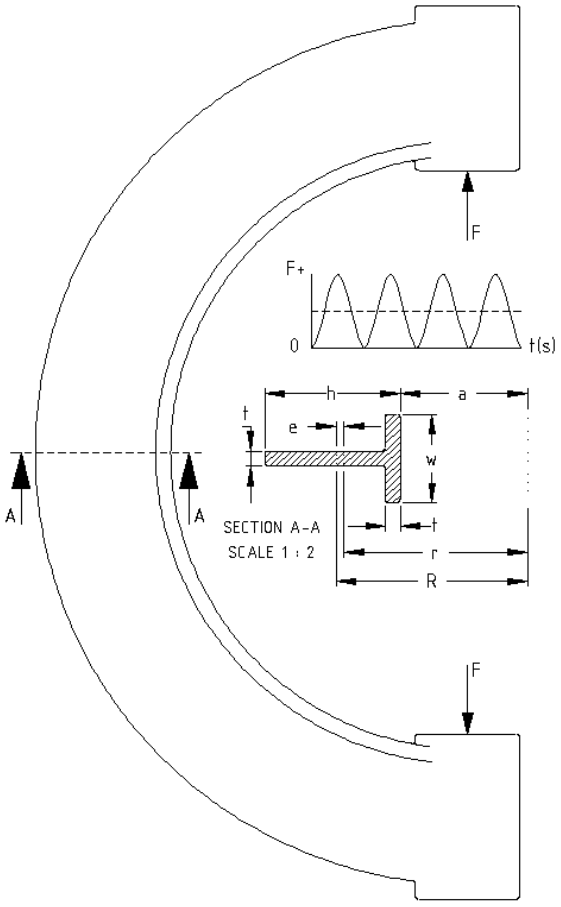

Figure 1: *C-Frame Reference*

Problem Solving Nomenclature:

	Description	*Value*	*Units*
a	C-Frame gap	100	mm
A	Area	TBD	mm^2
e	Distance between centroidal and neutral axis	TBD	mm
h	Height of profile	TBD	mm
M	Moment	TBD	N-mm
N_y	Factor of Safety	TBD	UL
P	Load	15,400	N
r	Radius of curvature at neutral axis	TBD	mm
R	Radius of curvature at centroidal axis	TBD	mm
t	Thickness	5	mm
w	Width of profile	TBD	mm
S_e	Endurance limit	620	MPa
S_u	Tensile strength	1,240	MPa
σ_C	Compressive stress	TBD	MPa
σ_T	Tensile stress	TBD	MPa
σ_d	Direct stress	TBD	MPa
σ_i	Stress at inside	TBD	MPa
σ_o	Stress at outside	TBD	MPa

Theoretical Background:

The area of the profile is given by:

$$A = wt + (h - t)t \quad [1]$$

The radius of curvature of the centroidal axis is:

$$R = a + \frac{h^2 t + t^2(w - t)}{2(ht + (w - t)t)} \quad [2]$$

The radius of curvature of the neutral axis is:

$$r = \frac{t(w - t) + ht}{(w - t)log_e\left(\frac{a + t}{a}\right) + tlog_e\left(\frac{b}{a}\right)} \quad [3]$$

Where:

$$b = a + h \quad [4]$$

The distance between the centroidal and neutral axis is:

$$e = R - r \quad [5]$$

The tensile stress limit for the inside is:

$$\sigma_T = \frac{2S_e}{N_y\left(1 + \frac{S_e}{S_u}\right)} \quad [6]$$

The compressive stress limit on the outside is:

$$\sigma_C = \frac{2S_e}{N_y} \quad [7]$$

Stress at the inside is given by:

$$\sigma_i = \frac{My_i}{Aea} + \sigma_d \quad [8]$$

Stress at the outside is given by:

$$\sigma_o = \frac{My_o}{Aea} + \sigma_d \quad [9]$$

Where:

$$\sigma_d = \frac{P}{A} \quad [10]$$

$$M = \Pr \quad [11]$$

N_y is to be derived via Johnson's approach for determining a statistically based factor of safety. Accordingly:

	Value	
Tolerance on design load	$\pm 20\%$	$\frac{\Delta L^2}{\bar{L}} = 0.2$
Estimation of the load capability of the manufactured part with respect to failure at 10^6 cycles	$\pm 40\%$	$\frac{\Delta \lambda^2}{\bar{\lambda}} = 0.4$
Reliability	0.999	$A_f = 0.001$

Using Johnson's formula:

$$N_y = 1 + \frac{0.43\sqrt{\left(\frac{\Delta L}{\bar{L}}\right)^2 {N_y}^2 + \left(\frac{\Delta \lambda}{\bar{\lambda}}\right)^2}}{{A_f}^{0.128}} \quad [12]$$

$$\left[5.4{A_f}^{0.256} - \left(\frac{\Delta L}{\bar{L}}\right)^2\right]{N_y}^2 - \left[10.8{A_f}^{0.256}\right]N_y + \left[5.4{A_f}^{0.256} - \left(\frac{\Delta \lambda}{\bar{\lambda}}\right)^2\right] = 0 \quad [13]$$

$$[5.4 \times 0.001^{0.256} - 0.2^2]{N_y}^2 - 10.8 \times 0.001^{0.256}N_y + 5.4 \times 0.001^{0.256} - 0.4^2 = 0 \quad [14]$$

Hence:

$$0.7613{N_y}^2 - 1.8426N_y + 0.8813 = 0 \quad [15]$$

$${N_y}^2 - 2.4195N_y + 1.1576 = 0 \quad [16]$$

$$N_y = 1.76 \approx 1.8 \quad [17]$$

Reference:

1. Applied Engineering – *Duggan*
2. Machine Design – *Gupta*
3. Handbook of formulas for Stress & Strain – *Griffel*
4. Optimum Design of Mechanical Elements – *Johnson*

Johnson's Method of Optimum Design:

In order to find the dimensions of the T-section which minimises A the initial formulation is taken to be:

PDE	$A = wt + (h - t)t$ [18]
SDE1	$R = a + \frac{h^2t + t^2(w-t)}{2(ht + (w-t)t)}$ [19]
SDE2	$r = \frac{t(w-t) + ht}{(w-t)log_e\left(\frac{a+t}{a}\right) + tlog_e\left(\frac{b}{a}\right)}$ [20]
SDE3	$b = a + h$ [21]
SDE4	$e = R - r$ [22]
SDE5	$\sigma_T = \frac{2S_e}{N_y\left(\frac{1+S_e}{S_u}\right)}$ [23]
SDE6	$\sigma_C = \frac{2S_e}{N_y}$ [24]
SDE7	$\sigma_i = \frac{My_i}{Aea} + \sigma_d$ [25]
SDE8	$\sigma_o = \frac{My_o}{Aea} + \sigma_d$ [26]
SDE9	$\sigma_d = \frac{P}{A}$ [27]
SDE10	$M = \Pr$ [28]
LE1	$\sigma_i \leq 460$ [29]
LE2	$\sigma_o \leq 690$ [30]
LE3	$h_{min} < h \leq h_{max}$ [31]
LE4	$w_{min} < w \leq w_{max}$ [32]
	$t = 5$ [33]
	$w_{max} = 30$ [34]
Known or specified	$a = 100$ [35]
	N_y [36]
	P [37]

By algebraic substitution the initial formulation can be reduced to:

PDE $$A = wt + th - t^2 \quad [38]$$

SDE1 $$R = a + \frac{h^2 t + t^2(w-t)}{2(ht + (w-t)t)} \quad [39]$$

SDE2 $$r = \frac{tw - t^2 + ht}{(w-t)log_e\left(\frac{a+t}{a}\right) + tlog_e\left(\frac{a+h}{a}\right)} \quad [40]$$

SDE3 $$\sigma_i = \frac{Pr(r-a)}{A(R-r)a} + \frac{P}{A} \quad [41]$$

SDE4 $$\sigma_o = \frac{Pr\big(h-(r-a)\big)}{A(R-r)b} - \frac{P}{A} \quad [42]$$

LE1 $$\sigma_i \leq 460 \quad [43]$$

LE2 $$\sigma_o \leq 690 \quad [44]$$

LE3 $$h_{min} < h \leq h_{max} \quad [45]$$

LE4 $$w_{min} < w \leq w_{max} \quad [46]$$

$$t = 5 \quad [47]$$

Known or specified

$$w_{max} = 30 \quad [48]$$

$$a = 100 \quad [49]$$

$$P \quad [50]$$

Analysing the revised initial formulation we find:

	w	t	h	R	a	r	σ_i	σ_o	P
DV		X			X				X
n_C	LE		LE				LE	LE	
n_f				X		X			

Hence:

Truly independent parameter $= 0$ [51]
$n_v = n_c + n_f$ [52]
$n_v = 4 + 2 = 6$ [53]
$N_s = 4$ [54]
$n_f < N_s =$ *Case of Redundant Specifications* [55]
$n_e = N_s - n_f$ [56]
$n_e = 4 - 2 = 2$ [57]
$D_{vs} = n_v - N_s + 1$ [58]
$D_{vs} = 7 - 4 + 1 = 4$ [59]
$n_r = n_c - n_e$ [60]
$n_r = 4 - 2 = 2$ [61]
$N_{ff} = N_s - n_f + 1$ [62]
$N_{ff} = 4 - 2 + 1 = 3$ [63]

On this basis we can extract the final formulation equations:

Final formulation (I):
$A = wt + th - t^2$ [64]

Final formulation (II):
$$\sigma_i = \frac{PC_1{}^2 - PC_1 a}{(wt + th - t^2)a(C_3 - C_1)} + C_2 \quad [65]$$

Final formulation (III):
$$\sigma_o = \frac{PC_1(h - C_1 - a)}{(wt + th - t^2)(a+h)(C_3 - C_1)} + C_2 \quad [66]$$

Where:

$$C_1 = \frac{tw - t^2 + ht}{(w-t)log_e\left(\frac{a+t}{a}\right) + tlog_e\left(\frac{a+h}{a}\right)} \quad [67]$$

$$C_2 = \frac{P}{(wt + th - t^2)} \quad [68]$$

$$C_3 = a + \frac{h^2 t + t^2(w-t)}{2(ht + (w-t)t)} \quad [69]$$

A three dimensional variation study using [64], [65] and [66] is sketched below in ***Figure 2*** where we can see that the optimum value of A will be achieved in relation to the point where equations [65] and [66] cross.

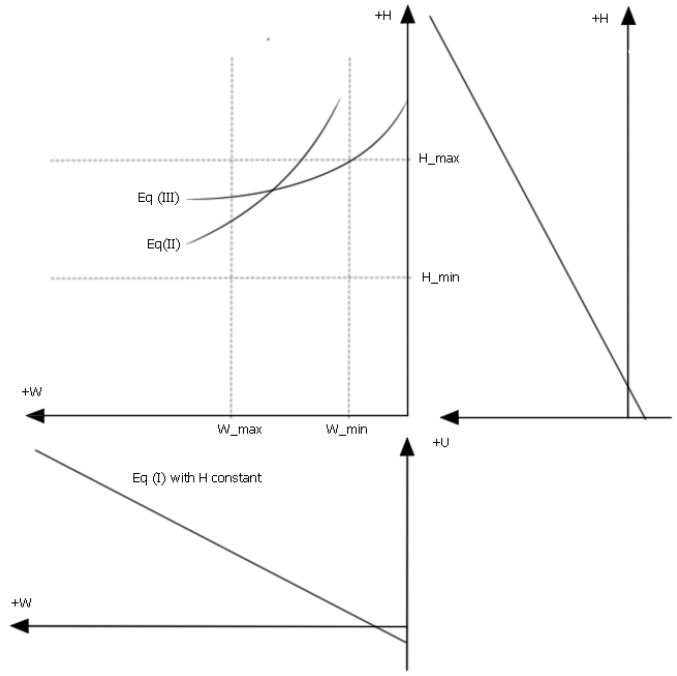

Figure 2: *Three dimensional variation diagram*

The crossing point was found via algebraic manipulation to be given by:

$w = 29.74mm$ [70]
$h = 45.61mm$ [71]
$A = 351.7mm^2$ [72]

A simple FEA static analysis was then performed using the dimensions derived in **[70]**, **[71]** and **[72]** with a constant loading of 15,400 N as a sanity check.

It can be seen from *Figure 3* that there is a close correlation between the stress limits established by the hand calculations and those derived from the FEA study.

END OF DOCUMENT

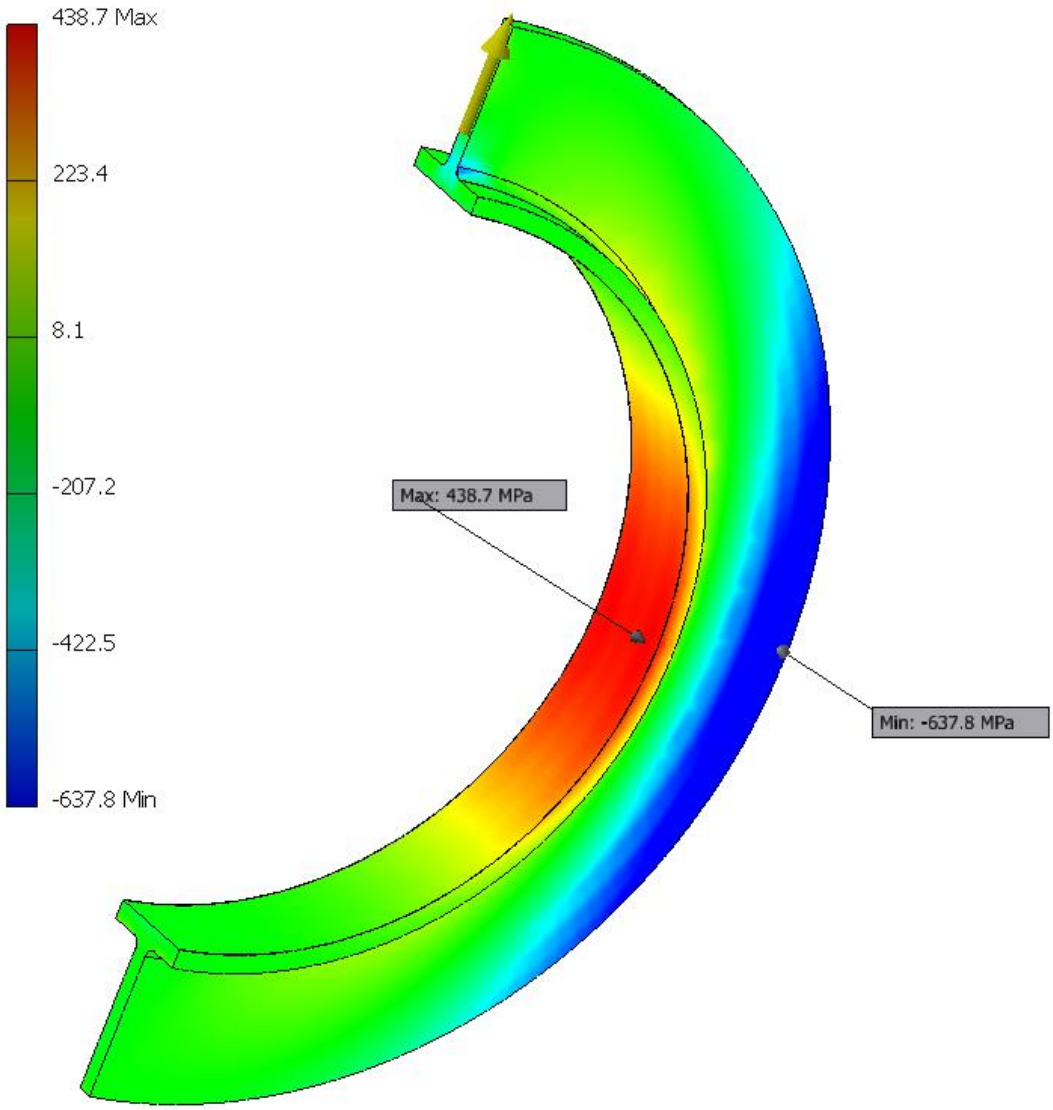

Figure 3: *Tensile = 438.7 MPa, Compressive = -637.8 MPa*

Appendix F

Optimisation:
Description: Rock Crusher
Units: Imperial
Issue: A

Summary

A rock crusher has been optimised with respect to delivering the maximum possible crushing force.

The result of 253,727 lb has been achieved using a modified approach to Taguchi's method of experimental design.

Suggestions have been made in the conclusion of this report to a possible approach that could potentially further improve upon the results derived.

Background

The basic configuration of the rock crusher and the main design parameters to be studied are illustrated below in *Figure 1*.

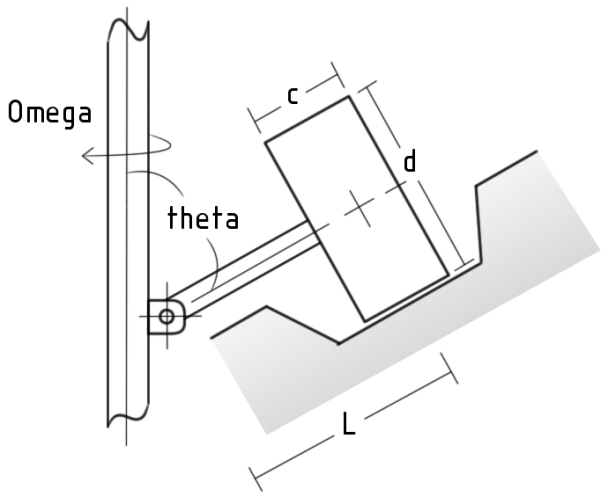

Figure 1: *Key design parameters*

A free body diagram illustrating the forces acting upon the roller is shown in *Figure 2*.

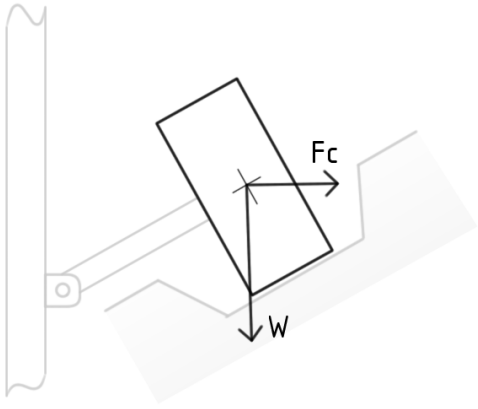

Figure 2: *Free body diagram*

Taguchi's Method

In order to use Taguchi's method with a constrained optimisation problem the approach set out by Rao and Chen[1] is to be used. Under their approach a modified form of the S/N ratio is developed so that both positive and negative objective function values can be used.

The modified S/N ratio takes the form of:

$$\eta = \begin{cases} -10log_{10}\left[\frac{1}{n}\left(1 + {F_{obj}}^2\right)\right] & F_{obj} > 0.0 \\ -10log_{10}\left[\frac{1}{n}\left(\frac{1}{1 + {F_{obj}}^2}\right)\right] & F_{obj} \leq 0.0 \end{cases} \quad [1]$$

The objective function remains as standard:

$F_{obj} = f(x_1, x_2, x_3 \ldots x_n)$ [2]

Constraints are incorporated via the use of quadratic loss penalty functions and on this basis the modified objective function takes the form of:

$$U = f(x) + \sum P(x) \quad [3]$$

Where $P(x)$ is the total value of the penalty functions used.

Normal Taguchi practise is adhered to such that after each run is completed the optimal level settings and associated confirmatory S/N value are derived.

New intervals on the design parameters are then established so that they can become new base settings for the next run.

The initial interval values are given by:

$intv_{initial} = x_{upp} - x_{low}$ [4]

Interval values are reduced by a factor of $1/k$ after each run, where k is taken to be 2 in most cases.

As found with unconstrained problems, Taguchi's approach gives us an indication of the most viable search direction to explore after each run and helps us move steadily towards an optimal value of the objective function.

Reference:

1. "*Taguchi-aided search method for design optimisation of engineering systems*" - *Rao & Chen*
2. Quality Engineering using Robust Design – *Phadke*
3. Taguchi Methods – *Peace*
4. Engineering Methods for Robust Product Design – *Fowlkes & Creveling*

Theoretical Approach

Table 1: Nomenclature

	Description	Value	Units
x_1	Angular Velocity (ω)	0 - 250	rpm
x_2	Arm Angle ($\emptyset$)	0 - 90	degrees
x_3	Roller Length (c)	0 - 3	ft
x_4	Roller Diameter (d)	0 – 5	ft
x_5	Arm Length (L)	0 – 7	ft
ρ	Steel Density	0.282	lb/in^3
μ	Poisson's Ratio	0.29	ul
E	Modulus of elasticity	30e6	psi
FOS	Factor of Safety	2	ul

The weight of the crushing roller is given by:

$$W = \pi x_3 x_4^2 \times \rho \times 144 \times \frac{12}{4} \text{ [5]}$$

The centrifugal force is defined as:

$$F_c = W x_1^2 x_5 \left(\frac{sinx_2}{32}\right) \text{ [6]}$$

The associated crushing force developed by the roller is:

$$F = (F_c \times cosx_2) + (W \times sinx_2) \text{ [7]}$$

Due to the nature of the penalty functions used our initial objective function is to be minimised such that:

$$U = -F \text{ [8]}$$

Ten penalty constraints are to be used. The first five simply ensure that the design parameters are non-negative.

$$P_1 = [0 \quad 0 - x_1] \text{ [9]}$$

$$P_1' = \left(max(P_1)\right)^2 \text{[10]}$$

$$P_2 = [0 \quad 0 - x_2] \text{ [11]}$$

$$P_2' = \left(max(P_1)\right)^2 \text{[12]}$$

$$P_3 = [0 \quad 0 - x_3] \text{ [13]}$$

$$P_3' = \left(max(P_3)\right)^2 \text{[14]}$$

$$P_4 = [0 \quad 0 - x_4] \text{ [15]}$$

$$P_4' = \left(max(P_4)\right)^2 \text{[16]}$$

$$P_5 = [0 \quad 0 - x_5] \text{ [17]}$$

$$P_5' = \left(max(P_5)\right)^2 \text{[18]}$$

Penalty constraint six is a Hertz based stress constraint hat ensures a safe level of stress in the face of the roller. The constraint is based upon a simplified approximation of a cylinder pressed against a plane surface. A weighting factor is used to account for the difference in magnitude to the other penalty constraints.

$$b = \left(\frac{4Fx_4\left(\frac{1-\mu^2}{E}\right)}{\pi x_3}\right)^{0.5} \text{ [19]}$$

$$S = \left(\frac{2F}{12\pi b x_3}\right) \text{ [20]}$$

$$S_{max} = \frac{70{,}000}{FOS} \text{ [21]}$$

$$P_6 = [0 \quad S - S_{max}] \text{ [22]}$$

$$P_6' = \left(max(P_6)\right)^2 \times 10^6 \text{ [23]}$$

The maximum velocity is constrained by:

$$P_7 = \left[0 \quad x_1 - \left(\frac{2 \times 250 \times \pi}{60}\right)\right] \text{ [24]}$$

$$P_7' = \left(max(P_7)\right)^2 \text{[25]}$$

The remaining penalty constraints are used to ensure that the design parameters stay within their specified range:

$$P_8 = [0 \quad x_3 - 3] \text{ [26]}$$

$$P_8' = \left(max(P_8)\right)^2 \text{[27]}$$

$$P_9 = [0 \quad x_4 - 5] \text{ [28]}$$

$$P_9' = \left(max(P_9)\right)^2 \text{[29]}$$

$$P_{10} = [0 \quad x_5 - 7] \text{ [30]}$$

$$P_{10}' = \left(max(P_{10})\right)^2 \text{[31]}$$

Our final objective function is:

$$U_{\downarrow} = U + \sum_{n=1}^{10} P_n' \text{ [32]}$$

Reference:

5. Analytical Decision Making in Engineering Design – *Siddall*

6. Mechanical engineering Design - *Shigley*

Array Selection

The Taguchi experiment involves three levels and five parameters; hence a L27 inner array was selected.

The associated starting levels used for the experiment are given in *Table 2*.

	LEVEL		
	1	**2**	**3**
x_1	0	125	250
x_2	0	0.785	1.57
x_3	0	1.5	3
x_4	0	2.5	5
x_5	0	3.5	7

Table 2: *Starting levels for Design Parameters*

Results

The modified Taguchi procedure was programmed using FORTRAN with the goal of maximising the S/N ratio.

The resultant optimal configuration for the rock crusher was derived to be:

η	F	x_1	x_2	x_3	x_4	x_5
115.077	253,727	116.5	0.64	3.00	5.00	3.69

Angular Velocity	116.5	rpm	[33]
Arm Angle	36.7	degrees	[34]
Roller Length	3.00	ft	[35]
Roller Diameter	5.00	ft	[36]
Arm Length	3.69	ft	[37]

Conclusion

Whilst the design has been successfully optimised, analysis of the layout of the rock crusher shows the following design matrix:

		DP 1 $\emptyset$	DP 2 L	DP 3 c	DP 4 d	DP 5 ω
FR 1	Angle Roller	X	O	O	O	O
FR 2	Position Roller	X	X	O	O	O
FR 3	Provide Contact	O	O	X	X	O
FR 4	Provide Mass	O	O	X	X	O
FR 5	Generate Force	X	X	X	X	X

We find that when reviewing the interactions a coupling exists between c and d indicating that the design is sub-optimal.

The optimisation procedure showed that the maximum force that can be generated by the rock crusher is limited by the Hertzian stresses generated in the face of the roller.

We also notice that the mass of the roller is clearly important as in order to generate the maximum possible force the roller mass should be as high as possible.

Hence we can conclude that an ideal roller will have both a high mass and a high capacity for Hertzian stress.

From an Axiomatic Design perspective fixing one of the roller dimensions and then using the remainder to control the mass (FR4) allows for a new design parameter to be found.

This new DP can then be used to exclusively meet the stress requirements faced (FR3). This DP could take the form of say; a new material, a new surface treatment approach etc.

As an aside the modified Taguchi approach that has been used can easily be adapted to generate an optimal robust design by the inclusion of an appropriately sized external noise array.

END OF DOCUMENT

Appendix G

Stochastic Optimisation:
Description: Sandwich Panel
Units: Imperial
Issue: A

Summary:

This report documents the stochastic optimisation of a sandwich panel with the objective being to minimise the total mass of the component whilst achieving a specified reliability.

Background:

We are tasked with designing a cargo floor for an aircraft that can carry a load of 8,000 pounds with a specified reliability of 0.995.

The decision has been made that the cargo floor will be configured as a sandwich panel formed from aluminium skins with a foamed polyurethane core (***Figure 1***).

Our goal is to minimise the total mass of the sandwich panel without exceeding a total depth of 3".

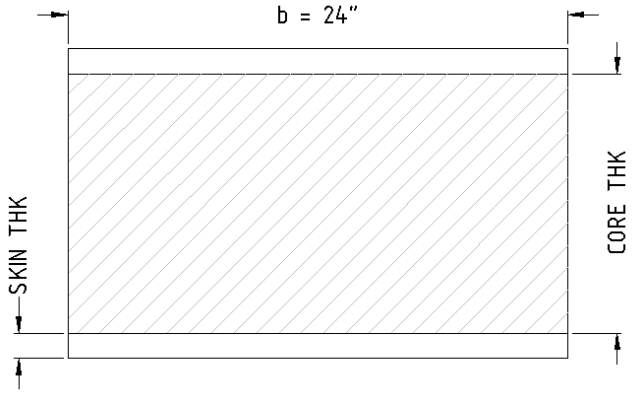

Figure 1: *Sandwich panel construction*

From a preliminary FMEA the following failure modes have been identified:

1. Yielding of the skin
2. Shear fracture of the core
3. Stiffness: Excess deflection
4. Skin wrinkling
5. Local compression
6. Adhesive failure

For the purpose of this report only failure modes 1 and 2 are to be considered.

Theoretical Background:

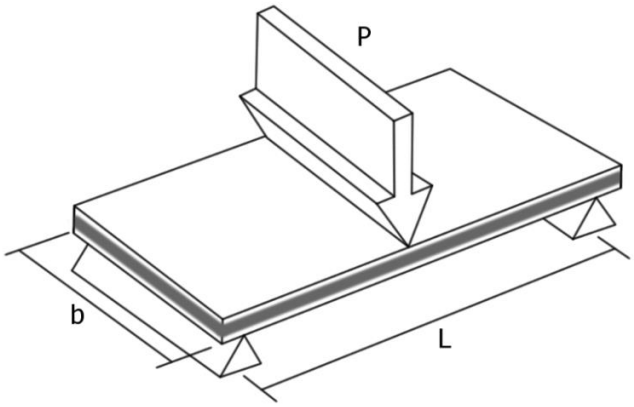

$b = 24$ inch $\quad P = 8{,}000$ pounds $\quad l = 48$ inch

Figure 2: *Loading nomenclature*

The sandwich panel is to be considered as a simply supported beam and on this basis the bending moment is derived from elementary beam theory as:

$$M = \frac{PL}{4} = 96{,}000 \text{ in-lbs} \quad [1]$$

Whilst the vertical shear is:

$$V = \frac{P}{2} = 4{,}000 \text{ lbs} \quad [2]$$

To guard against Failure Mode 1 the stress in the aluminium skin is given by:

$$\sigma_S = \frac{M}{bt_s(t_c + t_s)} \quad [3]$$

Failure Mode 2 is to be reviewed by analysing the resultant shear stress in the core:

$$\tau = \frac{V}{b(t_c + t_s)} \quad [4]$$

The probability distribution for the yield strength of the aluminium alloy we are to use is given by Mischke[1] as:

$$f(S) = \frac{b}{\theta}\left(\frac{S-S_0}{\theta}\right)^{b-1} exp\left(-\left(\frac{S-S_0}{\theta}\right)^{b}\right), S \geq S_0 \quad [5]$$

$$f(S) = 0\ , S < S_0 \quad [6]$$

Where:
$S =$ Yield stress (10^3psi)
$b = 1.42$
$\theta = 3.81$
$S_0 = 47.4$

The density of the aluminium is taken to be:

$$\gamma_{alu} = 0.1\ lb/in^3 \quad [7]$$

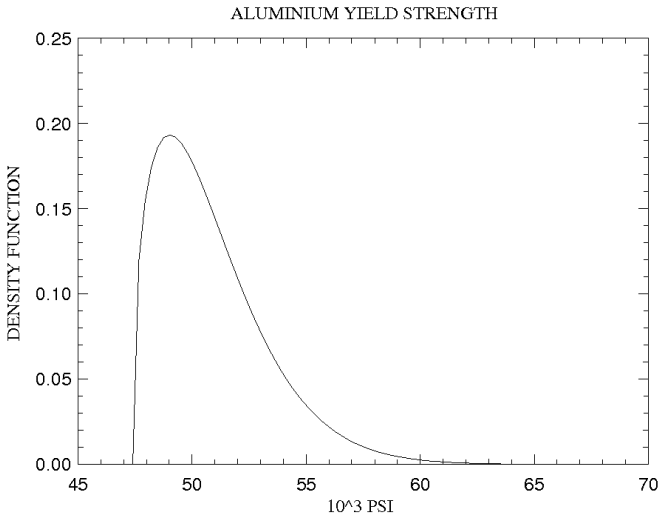

Figure 3: Aluminium yield strength variation

Based on commercial standards the aluminium thickness tolerances for a sheet width of 48" are tabulated below. We assume a 3 sigma normal distribution between limits.

Thickness	Tolerance (in.)
0.018 - 0.028	+/- 0.0025
0.029 – 0.036	+/- 0.0025
0.037 – 0.045	+/- 0.003
0.046 – 0.068	+/- 0.004
0.069 – 0.076	+/- 0.004
0.077 – 0.096	+/- 0.004
0.097 – 0.108	+/- 0.005
0.109 – 0.125	+/- 0.005
0.126 – 0.140	+/- 0.005
0.141 – 0.172	+/- 0.008
0.173 – 0.203	+/- 0.010
0.204 – 0.249	+/- 0.011

Table 1: *Aluminium thickness tolerance*

The shear strength of the foamed polyurethane core is taken to be a function of its density, hence:

$\tau = 14.9\gamma^{1.077}$ [8]

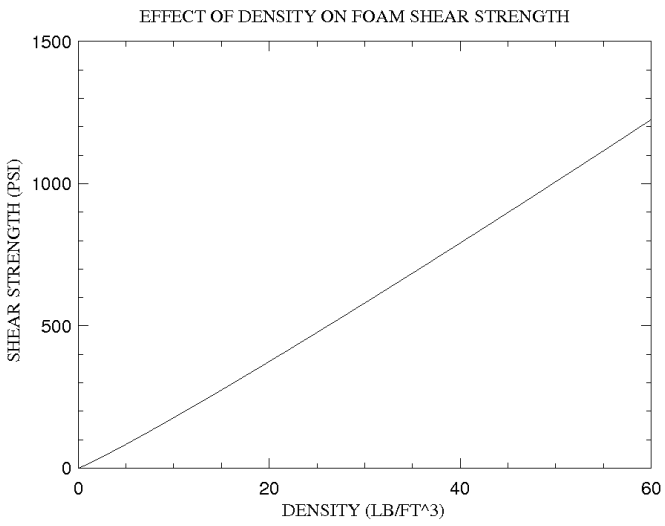

Figure 4: Polyurethane foam variation

A conservative estimation of the standard deviation of the polyurethane foam density is:

$\sigma_{foam_\gamma} = 0.1\bar{\gamma}$ [9]

From consulting a number of commercial polyurethane foam suppliers an appropriate tolerance on the foam thickness after cutting is between 0.05" to 0.06". For the purpose of this study we are to use the upper limit and assume a 3 sigma normal distribution between limits.

$t_{tol} = 0.06"$ [10]

The reliability of the sandwich panel within the context of this study can be considered as a series system, as failure of either component will result in a complete system failure.



Figure 5: *system in series*

The reliability of the series system is given by:

$R_T = R_S R_C$ [11]

Where:
$R_T =$ System reliability
$R_S =$ Reliability of the skin
$R_C =$ Reliability of the core

Assuming:

$R_S = R_C$ [12]

Means that we can solve for the individual reliability targets:

$R_T = \sqrt{0.995}$ [13]

$R_S = R_C = 0.9975$ [14]

References:

1. ASME Paper 71-Vibr-64, Sept. 1971 - *Mischke*
2. Probabilistic Design - *Siddall*

Objective Function:

The following design variables are to be considered in relation to the optimisation procedure:

	Optimisation Variables	Min	Max
x_1	Thickness of skin ($in.$)	0.062	0.190
x_2	Thickness of core ($in.$)	0.250	2.876
x_3	Density of polyurethane (lb/in^3)	0.00173611	0.02893520

The goal of this study is to minimise the mass of the sandwich panel. The mass of the core is given by:

$M_c = (X_2 \times 24 \times 48 \times X_3)$ [15]

The mass of the skins is taken to be:

$M_S = (X_1 \times 24 \times 48 \times 0.1 \times 2)$ [16]

Hence our objective function is:

$U \downarrow = 1152X_2X_3 + 230.4X_1$ [17]

Variation in the design is to be examined through the following probabilistic design variables:

	Stochastic Variables	Mean	SD
x_1'	Thickness of skin tolerance ($in.$)	Table 1	3σ
x_2'	Thickness of core tolerance ($in.$)	**[10]**	3σ
x_3'	Aluminium strength (psi)	50.8	**[5]**
x_4'	Polyurethane strength (psi)	**[8]**	**[9]**

Inequality Constraints:

Eleven inequality constraints have been identified.

$\emptyset_1 = (2x_1 + x_2) \leq 3$ [18]

$\emptyset_2 = x_1 \geq 0.062$ [19]

$\emptyset_3 = x_1 \leq 0.190$ [20]

$\emptyset_4 = x_2 \geq 0.250$ [21]

$\emptyset_5 = x_2 \leq 2.876$ [22]

$\emptyset_6 = x_3 \geq 0.00173611$ [23]

$\emptyset_7 = x_3 \leq 0.02893520$ [24]

$\emptyset_8 = R_S \geq 0.9975$ [25]

$\emptyset_9 = R_S \leq 0.9990$ [26]

$\emptyset_{10} = R_C \leq 0.9975$ [27]

$\emptyset_{11} = R_C \leq 0.9990$ [28]

No equality constraints are used within this study.

Problem Solving Approach:

1. *Method of execution*
2. *Results*
3. *Conclusions*

#1 - Method of execution

A Monte Carlo probabilistic analysis is to be performed at each search point generated by a non-linear search routine. The optimisation and probabilistic design routines are FORTRAN based.

From preliminary investigations it was found that out of a number of non-linear search routines considered ADRANS was the most stable and gave the best results.

ADRANS is a pseudo-random search strategy developed by Gall. It is less likely to stall on constraints and is assumed to have reached the optimum when no improvement in the objective function can be found after generating a user-specified number of random trail moves.

CARLO is a Monte Carlo subroutine by Siddall that provides an estimate of the random nature of y_i where:

$y_i = g_i(x_1, x_2, x_3 \ldots . x_n)$ [29]

and the probability density functions of the x's are known.

References:

3. A generalised procedure for automated optimal design – *Gall and Krokosky*
4. Probabilistic Design - *Siddall*

#2 - Results

The results of the ADRANS-CARLO stochastic non-linear optimisation routine are tabulated below:

		Units	
Skin Thickness	0.117466	$Inch$	[30]
Core Thickness	0.699772	$Inch$	[31]
Polyurethane Density	15.4223	lb/ft^3	[32]
R_S	0.998771		[33]
R_c	0.997859		[34]
R_T	0.996		[35]
Mass:	34.2589	$Pounds$	[36]
Total Thickness:	0.934704	$Inch$	[37]

The associated probability density curves are illustrated in *Figures 6* and *7*.

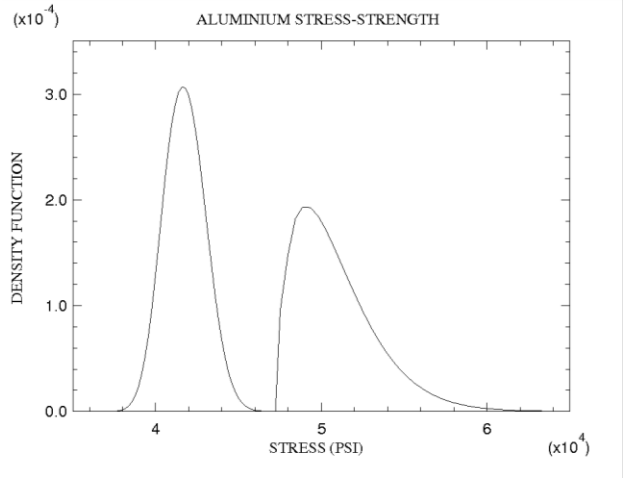

Figure 6: *Aluminium stress versus strength plot*

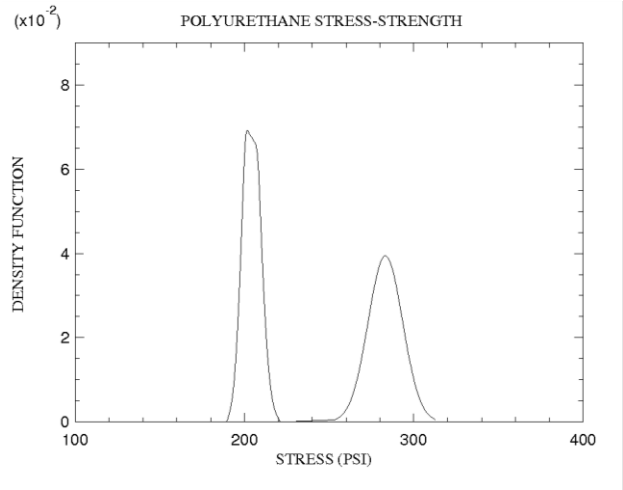

Figure 7: *Polyurethane stress versus strength plot*

#3 - Conclusions

It should be recognised that the design parameter values derived for the sandwich panel are based on a search methodology which used continuous values.

The next practical step would be to select the closest commercially available discrete values for both the aluminium sheet thickness and polyurethane density.

Once stock sizes and tolerances have been selected a final probabilistic design study can then be performed to ensure that the original reliability target is maintained.

END OF DOCUMENT

Appendix H

Design Optimisation:
Description: Prototype Aircraft Score
Units: Imperial
Issue: A

Summary:

From the values provided the prototype aircraft has a design score of **70.93** out of 100.

Background to Problem:

A new prototype aircraft is to be analysed with respect to nine key specifications.

Spec.	Units	Weight	Value Curve	Target	Lower Limit	Upper Limit	Actual
Mission radius	nm	5.0	NIB	365.5	296.0	435.0	405
Ultimate load factor	UL	4.5	NIB	7.2	6.5	7.9	6.7
Combat Mach number	UL	4.0	NIB	1.0	0.9	1.1	0.99
Mission payload	Lb	3.0	SIB	500	-	1,000	700
Thrust per engine	Lb	5.0	NIB	17,750	14,500	21,000	17,750
Ref. Wing area	ft^2	5.0	NIB	450	380	520	430
Stealth penalty	Lb	4.5	SIB	700	-	1,000	500
Auxiliary fuel tanks	# of	3.0	NIB	1	0	2	1
Specific fuel consumption	k-factor	3.0	NIB	0.95	0.90	1.00	0.93

Optimisation Approach:

The problem is to be solved by the use of value curves. Two types of value curves have been specified namely '*nominal is best*' and '*less is better*'.

$$d_{NTB} = \begin{cases} 0 & if\ actual \geq upper\ or\ actual \leq lower \\ \left(\dfrac{upper - actual}{upper - target}\right) & if\ target \leq actual \leq upper \\ \left(\dfrac{actual - lower}{target - lower}\right) & if\ lower \leq actual \leq target \end{cases}$$

$$d_{SIB} = \begin{cases} 0 & if\ actual \geq upper \\ \left(\dfrac{upper - actual}{upper - target}\right) & if\ target \leq actual \leq upper \\ 1 & if\ actual \leq target \end{cases}$$

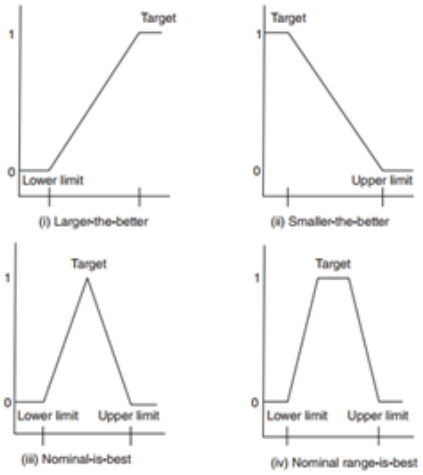

Results:

Based on the results provided the score for each specification is tabulated below:

Spec.	Units	Target	Lower Limit	Upper Limit	Actual	Score
Mission radius	nm	365.5	296.0	435.0	405	**0.4317**
Ultimate load factor	UL	7.2	6.5	7.9	6.7	**0.2857**
Combat Mach number	UL	1.0	0.9	1.1	0.99	**0.9000**
Mission payload	Lb	500	-	1,000	700	**0.6000**
Thrust per engine	Lb	17,750	14,500	21,000	17,750	**1.0000**
Ref. Wing area	ft^2	450	380	520	430	**0.7143**
Stealth penalty	Lb	700	-	1,000	500	**1.6670**
Auxiliary fuel tanks	# of	1	0	2	1	**1.0000**
Specific fuel consumption	k-factor	0.95	0.90	1.00	0.93	**0.6000**

The design score for the prototype is therefore:

$$D_{score} = \left[\prod_{j=1}^{k}\left(d_j^{i_j}\right)\right]^{\left(\frac{1}{\sum_{j=1}^{k} i_j}\right)} = 0.7093$$

Note that i_i is the importance of the jth requirement.

END OF DOCUMENT